10 Technische Daten

10.1 Werkzeugausrüstungen

WA7 - WA010

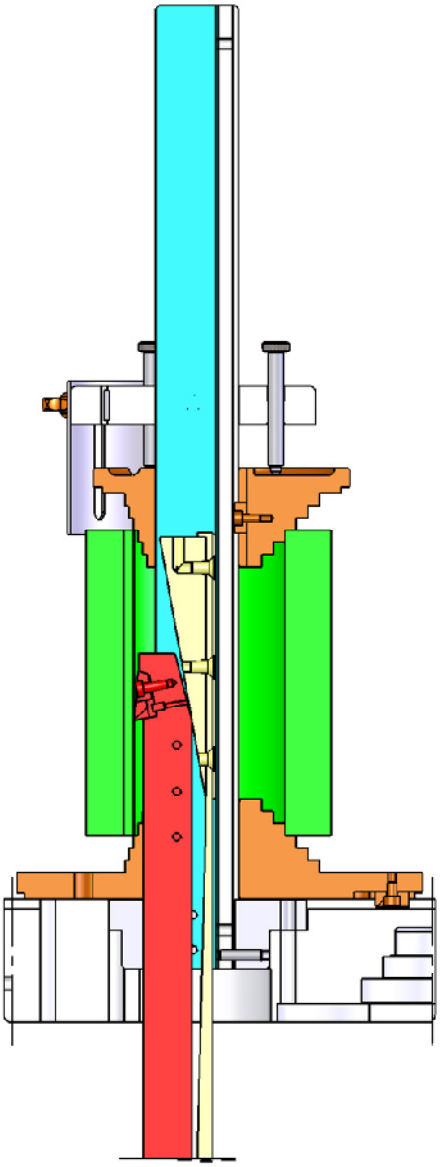

WA4 - WA6

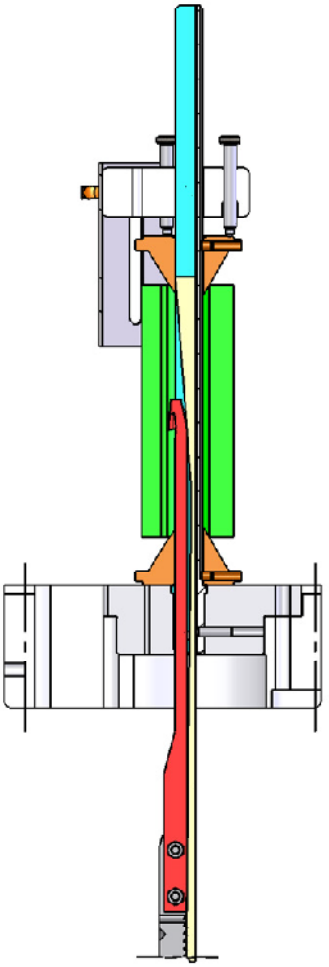

	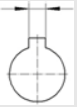	max.	**Werkzeug-ausrüstung WA** * nur für Anschnitt-erkennung	CNCE32	CNCE50	CNCE70-425	CNCE70-600	CNCE70-750	CNCE70-1000	CNCE100-125-600	CNCE100-125-750	CNCE100-125-1000	CNCE100-125-1250	CNCE100-125-1500
10 - 13	3 - 4	70	**4-1D**	X	X	X	X	X	X	X	X	X	X	X
13 - 20	3 - 6	100	**5-1C***	X	X	X	X	X	X	X	X	X	X	X
			5-1D	X	X	X	X	X	X	X	X	X	X	X
20 - 40	6 -12	150	**6-1C***	X	X	X	X	X	X	X	X	X	X	X
			6-1D	X	X	X	X	X	X	X	X	X	X	X
		250	**6-250-1C***	X	X	X	X	X	X	X	X	X	X	X
			6-250-1D	X	X	X	X	X	X	X	X	X	X	X
40 - 85	12 - 22	425	**7-425-1C***	X	X	X	X	X	X	X	X	X	X	X
			7-425-1D	X	X	X	X	X	X	X	X	X	X	X
		500	**7-500-1C***				X	X	X	X	X	X	X	X
			7-500-1D				X	X	X	X	X	X	X	X
80 - 130	22 - 32	425	**8-425-1C***	X	X	X	X	X	X	X	X	X	X	X
			8-425-1D	X	X	X	X	X	X	X	X	X	X	X
		600	**8-600-1C***				X	X	X	X	X	X	X	X
			8-600-1D				X	X	X	X	X	X	X	X
		750	**8-750-1C***					X	X		X	X	X	X
			8-750-1D					X	X		X	X	X	X
85 - 290	22 - 70	425	**8-9-425-1C***	X	X	X	X	X	X	X	X	X	X	X
			8-9-425-1D	X	X	X	X	X	X	X	X	X	X	X
		600	**8-9-600-1C***				X	X	X	X	X	X	X	X
			8-9-600-1D				X	X	X	X	X	X	X	X
		750	**8-9-750-1C***					X	X		X	X	X	X
			8-9-750-1D					X	X		X	X	X	X
		1000	**8-9-1000-1C***						X			X	X	X
			8-9-1000-1D						X			X	X	X
		1250	**8-9-1250-1C***										X	X
			8-9-1250-1D										X	X
270 - 750	70 - 125	600	**010-600-1C***				X	X	X	X	X	X	X	X
			010-600-1D				X	X	X	X	X	X	X	X
		750	**010-750-1C***					X	X	X	X	X	X	X
			010-750-1D					X	X	X	X	X	X	X
		1000	**010-1000-1C***						X			X	X	X
			010-1000-1D						X			X	X	X
		1250	**010-1250-1C***										X	X
			010-1250-1D										X	X
		1500	**010-1500-1C***											X
			010-1500-1D											X

10.1.1 Werkzeugführung

Werkzeugführung

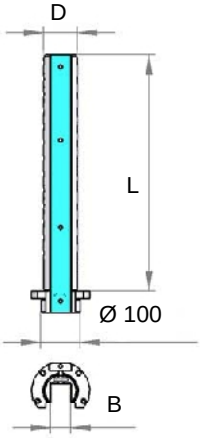

Spannstück

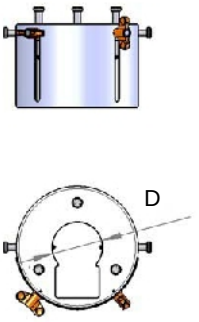

Werkzeugführung	Abmessungen					max.	Spann-stück	Abmessungen	
	D	B	L					D	M
WF4-1D	10	4	145	10	3	70	WSP4-1SB	10	8
WF4-2D	11			10 - 13	3 - 4		WSP4-2SB	11	
WF5-1C	13	5	210	13 - 20	3 - 6	100	WSP5-1SB	13	8
WF5-1D									
WF6-1C	20	10	280	20 - 40	6 - 12	150	WSP6-1SB	20	8
WF6-1D									
WF6-250-1C			380			250			
WF6-250-1D									
WF7-425-1C	40	22	595	40 - 85	12 - 22	425	WSP7-1SB	40	10
WF7-425-1D									
WF7-500-1C			705			500			
WF7-500-1D									
WF8-425-1C	60	32	585	80 - 130	22 - 32	425	WSP8-1SB	60	10
WF8-425-1D									
WF8-600-1C			765			600			
WF8-600-1D									
WF8-750-1C			915			750			
WF8-750-1D									
WF9-600-1C	85	50	825	85 - 290	22 - 70	600	WSP9-1SB	85	10
WF9-600-1D									
WF9-750-1C			980			750			
WF9-750-1D									
WF9-1000-1C			1205			1000			
WF9-1000-1D									
WF9-1250-1C			1455			1250			
WF9-1250-1D									
WF010-600-1C	140	70	825	200 - 750	70 - 125	600	WSP 010-1SB	140	10
WF010-600-1D									
WF010-750-1C			980			750			
WF010-750-1D									
WF010-1000-1C			1290			1000			
WF010-1000-1D									
WF010-1250-1C			1540			1250			
WF010-1250-1D									
WF010-1500-1C			1745			1500			
WF010-1500-1D									

10.1.2 Standard-Werkzeughalter

WST4-WST6

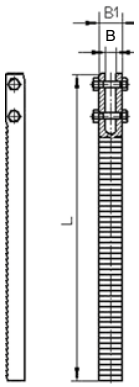

WST07-WST08-9

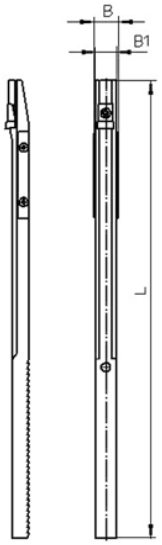

WST09-WST010

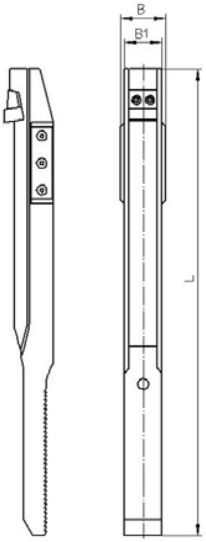

Standard-Werkzeughalter

Werkzeughalter	Abmessungen L	Abmessungen B	Abmessungen B1			max.	Nasen-breite
WST4-1	290	5	22	10 - 13	3 - 4	70	
WST5-1	290	5	22	13 - 20	3 - 6	100	
WST6-1	290	10	22	20 - 40	6 - 12	150	
WSTNP07-425-1	840	22	18,8	40 - 85	12 - 22	425	11
WSTNP07-500-1	950						
WSTH07-425-1	830					500	15,5
WSTH07-500-1	950						
WST08-425-1	845	32	27	80 - 130	22 - 32	425	21
WST08-600-1	1020					600	
WST08-750-1	1185					750	
WST08-9-425-1	850	50	41	85 - 130	22 - 32	425	21
WST08-9-600-1	1040					600	
WST08-9-750-1	1190					750	
WST08-9-1000-1	1495					1000	
WST08-9-1250-1	1700					1250	
WST09-425-1	850	50	41	130 - 290	32 - 70	425	31
WST09-600-1	1040					600	
WST09-750-1	1190					750	
WST09-1000-1	1495					1000	
WST09-1250-1	1745					1250	
WST010-600-1	1050	70	65	200 - 750	50 - 100	600	49
WST010-600-2					90 - 125		65
WST010-750-1	1200				50 - 100	750	49
WST010-750-2					90 - 125		65
WST010-1000-1	1550				50 - 100	1000	49
WST010-1000-2					90 - 125		65
WST010-1250-1	1750				50 - 100	1250	49
WST010-1250-2					90 - 125		65
WST010-1500-1	2100				50 - 100	1500	49
WST010-1500-2					90 - 125		65

Vielkeil-Werkzeughalter

WSTNVP07-425-1	840	22	18,8	40 - 85	9 - 16	425	8,8
WSTNVP07-500-1	950						
WSTHV07-425-1	830					500	11,5
WSTHV07-500-1	950						
WSTV08-425-1	845	32	27	80 - 130	14 - 24	425	13,5
WSTV08-600-1	1020					600	
WSTV08-9-425-1	850	50	41			425	13,5
WSTV08-9-600-1	1040					600	
WSTV08-9-750-1	1190					750	

10.1.3 Vorschubstange

WV4-WV6

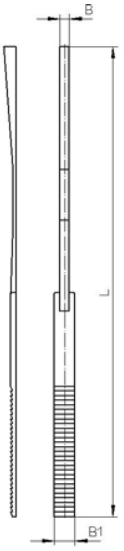

WV7-WV010

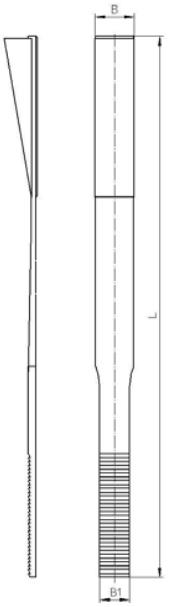

Vorschubstange	Abmessungen					max.
	L	B	B1			
WV4-1D	800	4	22	10 - 13	3 - 4	70
WV5-1D	800	5	22	13 - 20	3 - 6	100
WV6-D	880	10	22	20 - 40	6 - 12	150
WV6-250-1D	980					250
WV7-425-1D	1150	22	20	40 - 85	12 - 22	425
WV7-500-1D	1260					500
WV8-425-1D	1150	32	30	80 - 130	22 - 32	425
WV8-600-1D	1360					600
WV8-750-1D	1530					750
WV9-425-1D	1160	50	38	85 - 290	22 - 70	425
WV9-600-1D	1400					600
WV9-750-1D	1510					750
WV9-1000-1D	1880					1000
WV9-1250-1D	2150					1250
WV010-600-1D	1400	70	38	200 - 750	50 - 125	600
WV010-750-1D	1550					750
WV010-1000-1D	1900					1000
WV010-1250-1D	2150					1250
WV010-1500-1D	2400					1500

10.1.4 Zentrierungen

WZK, WZK...-U oder -DU

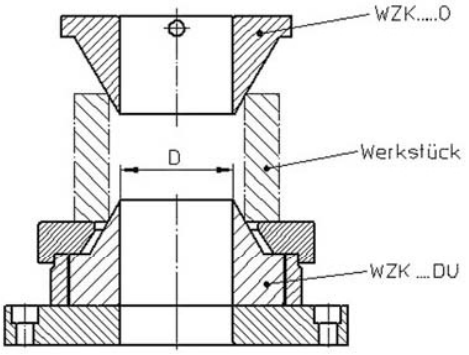

Zentrierungen					
oben	unten ohne versenken	unten für versenken	D	Bohrungsbereich	Exz.
WZK4-1-	WZK4-1	WZK4-1DU	10	11 - 14	
WZK5-1	WZK5-1	WZK5-1DU	13	14 - 22	
WZK6-1	WZK6-1	WZK6-1DU	20	21 - 45	
WZK7-1O	WZK7-1U	WZK7-1DU	40	41 - 85	
WZK8-1O	WZK8-1U	WZK8-1DU	60	75 - 90	4
WZK8-2O	WZK8-2U	WZK8-2DU		90 - 105	9
WZK8-3O	WZK8-3U	WZK8-3DU		105 - 130	14
WZK8-9-1O	WZK8-9-1U	WZK8-9-1DU	85	86 - 130	
WZK9-1O	WZK9-1U	WZK9-1DU		130 - 165	18
WZK9-2O	WZK9-2U	WZK9-2DU		165 - 200	34
WZK9-3O	WZK9-3U	WZK9-3DU		200 - 230	48
WZK010-1O	WZK010-1U	WZK010-1DU	140	200 - 230	15

Zentrierungen *(Fortsetzung)*

WZB, WZB...-U oder-DU

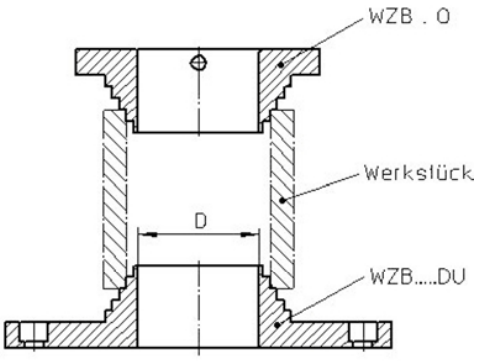

Zentrierungen			D	zu zentrierende Bohrung / Exzentrizität								
oben	unten ohne versenken	unten für ver-senken										
WZB7-1	WZB7-1	WZB7-1DU	40	45	50	55	60	65	70	75	80	85
WZB8-1O	WZBB8-1DU	WZB8-1DU	60	80/5	90/7,5	100/10	110/12,5	120/15	130/17,5			
WZB8-2O	WZB8-2DU	WZB8-2DU		75/4	85/5	95/7,5	105/10	115/12,5	125/15			
WZB8-9-1O	WZB8-9-1O	WZB8-9-1DU	85	90	100	110	120	130				
WZB8-9-2O	WZB8-9-2O	WZB8-9-2DU		95	105	115	125					
WZB9-1O	WZB9-1DU	WZB9-1DU	85	130/17,5	135/17,5	150/20	170/25	190/30				
WZB9-2O	WZB9-2DU	WZB9-2DU		140/22,5	148/22,5	160/25	180/30	200/35				
WZB9-3O	WZB9-3DU	WZB9-3DU		210/48	220/48	230/48						

Zentrierungen *(Fortsetzung)*

WZV...-DU

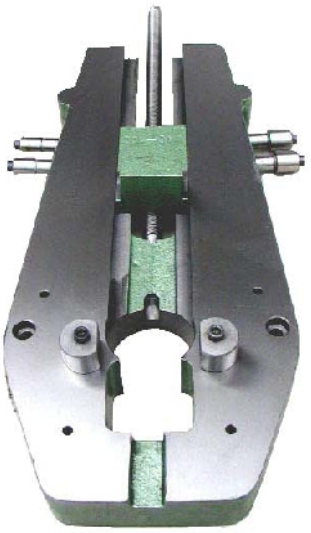

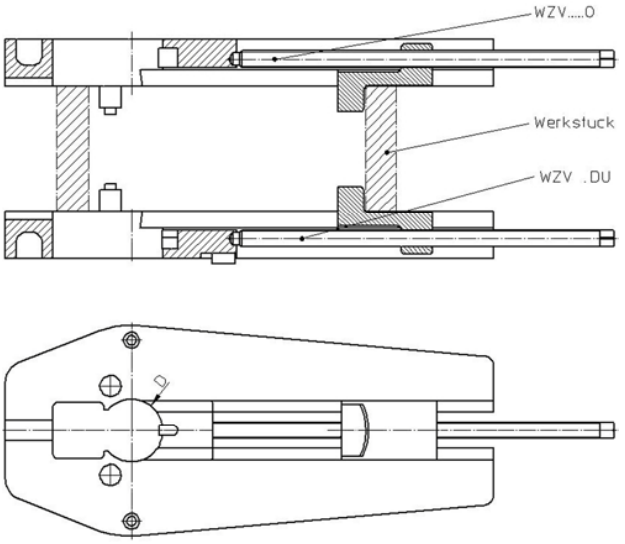

Verstellbare Zentrierung				
oben	**unten**	**D**	**Bohrungsbereich**	**Nutenbreite**
WZV6-1O	WZV6-1DU	20	40 - 150	6 - 12
WZV6-2O	WZV6-2DU	20	150 - 300	6 - 12
WZV7-1O	WZV7-1DU	40	80 - 200	16 - 22
WZV8-1O	WZV8-1DU	60	130 - 300	22 -32
WZV8-9-1O	WZV8-9-1DU	85	130 - 400	22 - 70
WZV010-1O	WZV010-1DU	140	200 - 500	50 - 125

Zentrierungen *(Fortsetzung)*

WZM

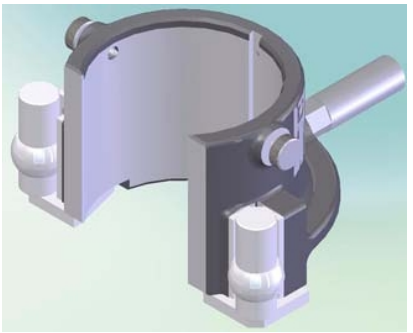

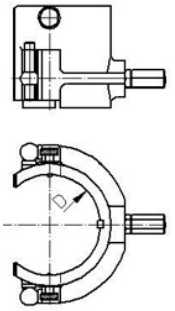

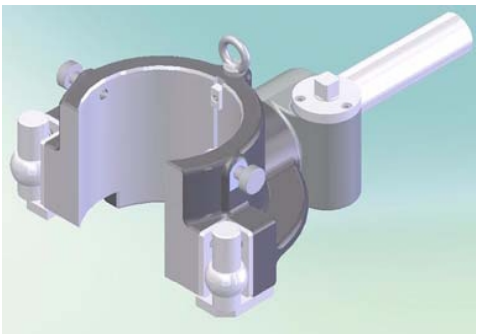

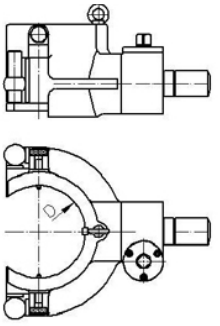

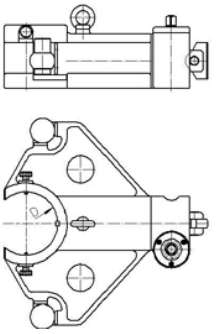

Zentrierungen WZM	D	Bohrungsbereich
WZM010-1	140	230 - 330
WZM010-2	140	330 - 500
WZM10-3	140	500 - 750